Career Episode 1

Grid Connected PV Systems

A) Introduction

[CE 1.1] I made this career episode particularly emphasizing on the project which I completed as an Electrical Engineering student at [University Name]. The title of the project was "Grid Connected PV Systems." The project duration was from [Date] till [Date].

Project Title: Grid Connected PV Systems

Duration of Project: [Date] – [Date]

Location:

Position: Electrical Engineering Student

A) Background

[CE 1.2] The overloading is faced on the distribution grids as well as on the power systems with the continuously increase in energy consumption. It put the negative impact on the security, power availability, and quality. Distributed Generation (DG) systems is one of the solutions for overcoming the shortfall. Renewable energy sources like solar or wind used by the DG systems have the advantage that the power is produced in close proximity to where it is acutally consumed. It further results in minimizing the loss because of the transmission lines. Solar energy technologies have become less expensive in the last decade and it became more efficient with providing the attractive solution. It made it cleaner and more environmentally friendly energy source as that of the traditional ones.

[CE 1.3] The project objectives were as follow:

- System designing after site survey
- PV Modelling on MATLAB
- DC-DC Boost Converter Modelling
- Integration of PV and converter with MPPT
- Modelling of Inverter

[CE 1.4] Below is the organizational chart which shows my position as an Electrical Engineering student:

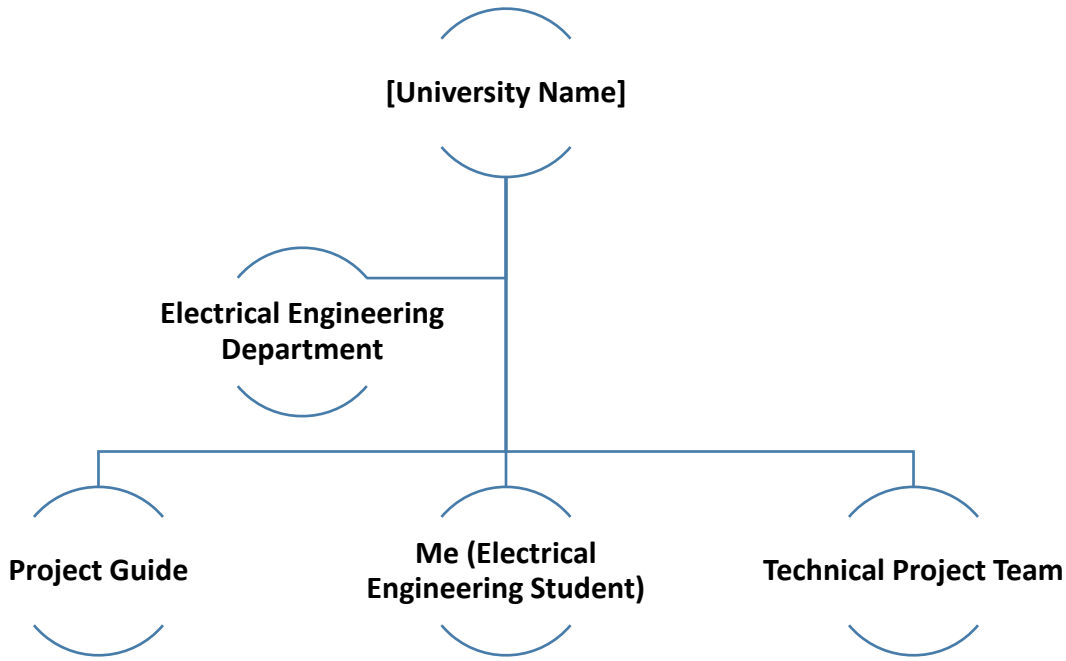

[CE 1.5] Following were my project responsibilities:

- I designed the system after completing the site survey
- I was also involved in the PV modelling
- I did coding for MPPT algorithm
- I was also involved in the DC-DC boost converter modelling
- The results obtained from MATLAB was also analysed by me
- I also did transformer modelling and parameters selection
- The final project report was also prepared by me

B) Personal Engineering Activity

[CE 1.6] I studied numerous subjects related to electrical engineering throughout the bachelor's degree program. It gave me enormous knowledge to complete each task effectively. For PV modelling, I connected numbers of cells in series and parallel to increase the current, operating voltage as well as the output power. I also plotted the influence of irradiance on output of cell. The series parallel connection of cell is shown below:

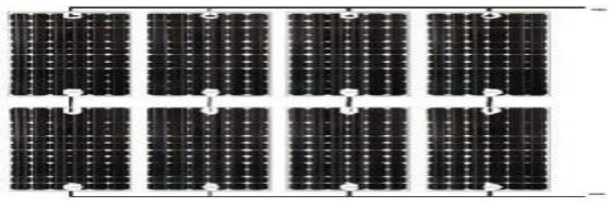

Figure 1: Series-Parallel connection of cell

I developed and used PnO algorithm for maximum power point tracking. With this method, I iterated the maximum power point of PV modules by means of perturbing. I designed the inverter on the basis of single phase and it was single phase full wave bridge rectifier. I made it work in terms of switching mode. I used the power conditioner which itself is actually the main link between the PV array and mains in the grid connected solar PV system. Moreover, I did the converter modelling based on the circuit diagram of DC-DC boost converter. I used the voltage source inverter with DC capacitor. Furthermore, numerous technical papers were also read by me. I also attended numerous conferences based on the electrical engineering to comprehend my knowledge up to date and applied it in the project.

[CE 1.7] The first milestone of the project was based on the converter modelling. The converter modeling was done on the basis of the circuit diagram of DC-to-DC boost converter. In the modeling 24V DC supply and an ideal switch along with pulse generator was used. The diode used was in-built block of MATLAB Simulink library. The value of inductance in the model is 1.92 mH.

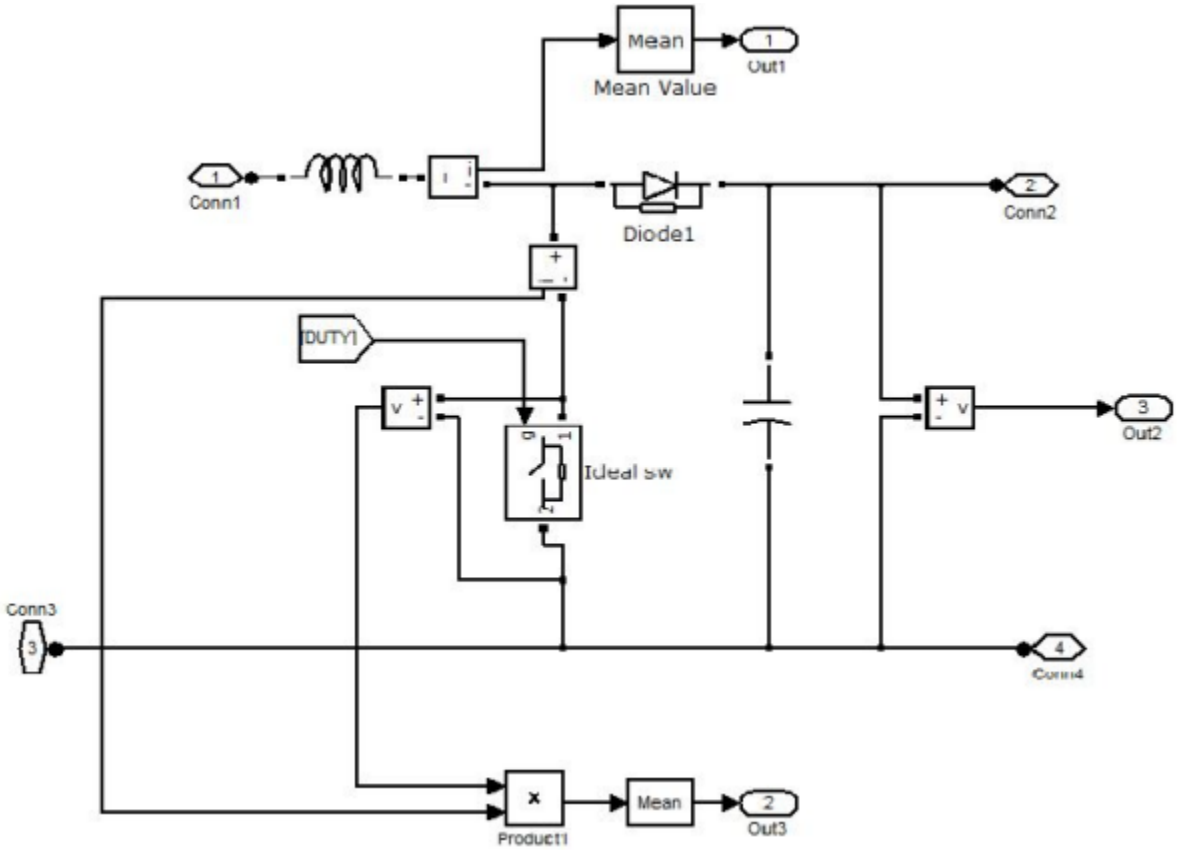

Figure 2: DC-DC Boost Converter Modelling

Thus, I obtained constant 24V from the above model as the converter uniform the input voltage. So boost converter model in the proposed schemes uniforms the voltage obtained from PV block.

[CE 1.8] This step of the project involved the MATLAB MPPT block coding which was done using the user defined functional block in MATLAB. Perturbation and observation algorithm was applied for the above MPPT coding due to its simple structure and fewer parameters requirement for maximum power point tracking (MPPT). MPPT block generated required duty cycle for maximum power point tracking. I also plotted the Simulink model in which he solar irradiance was supplied to the Boost Converter. PV block generates peak voltage up to 25.92V in the model. The simulation was run for 10 second; Converter uniforms the voltage to about 24V with minimum power losses as expected and the MPPT tracks the maximum power point. Hence it was verified that the boost converter provides constant DC voltage. Thus the above model was appropriate for further interconnection with the inverter as per requirement.

[CE 1.9] This milestone of the project was based on the integration of PV and converter with MPPT. I used the MATLAB Simulink model. Signal Builder was used as a source of irradiance. Previously designed PV subsystem was used to convert Solar energy to Electrical energy. The output voltage and current of PV system was fed to MPPT block so as to generate duty cycle to track the maximum power point. The duty cycle thus generated was used to produce gate signal to the Converter. The Converter was provided to step up the voltage or to make it uniform voltage so that the constant voltage obtained can be supplied to the inverter. So, this model comprises of PV unit of the proposed system.

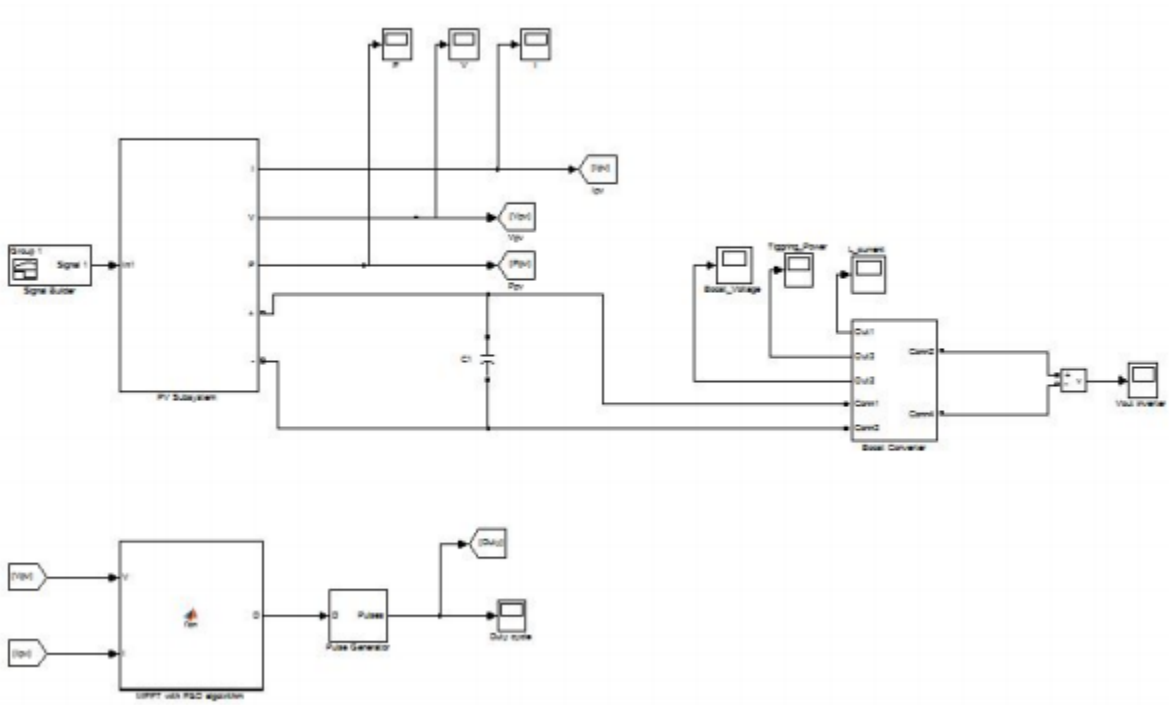

Figure 3: MATLAB Simulink model of PV

The solar irradiance was supplied to the Boost Converter. PV block generates peak voltage up to 25.92V in above model. The simulation was run for 10 second; Converter uniforms the voltage to

about 24V with minimum power losses as expected and the MPPT tracks the maximum power point. Hence it was verified that the boost converter provides constant DC voltage

[CE 1.10] This step of the project was based on the inverter modelling used in the simulation of my project which was a voltage source inverter with a dc capacitor with a constant dc voltage across it in dc side of the inverter. Here constant DC voltage source 24V was supplied into the inverter and inverted into AC voltage to 24V as shown in the plot below.

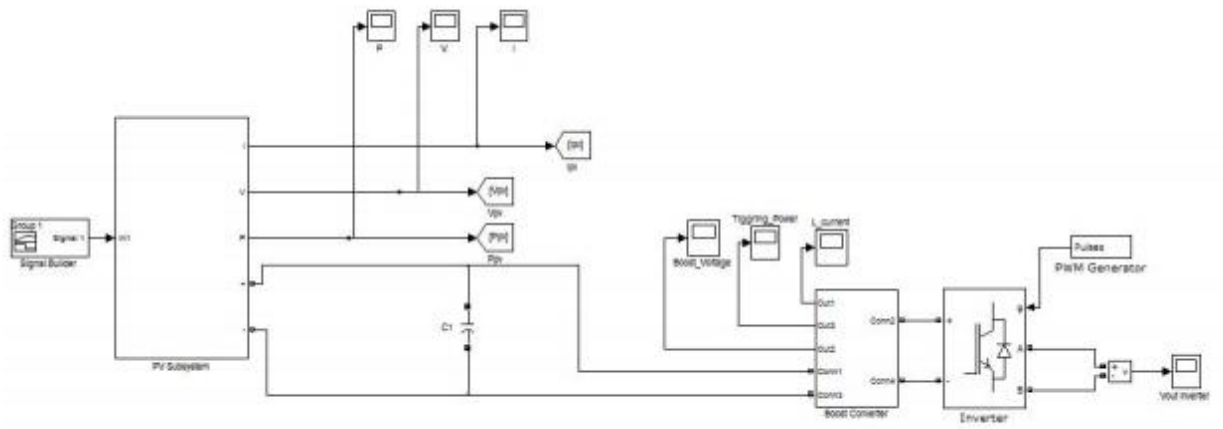

Figure 4: Inverter Modelling

I run the simulation for one second only. The output voltage is AC voltage of uniform 24V and slight changes has been observed in triggered point.

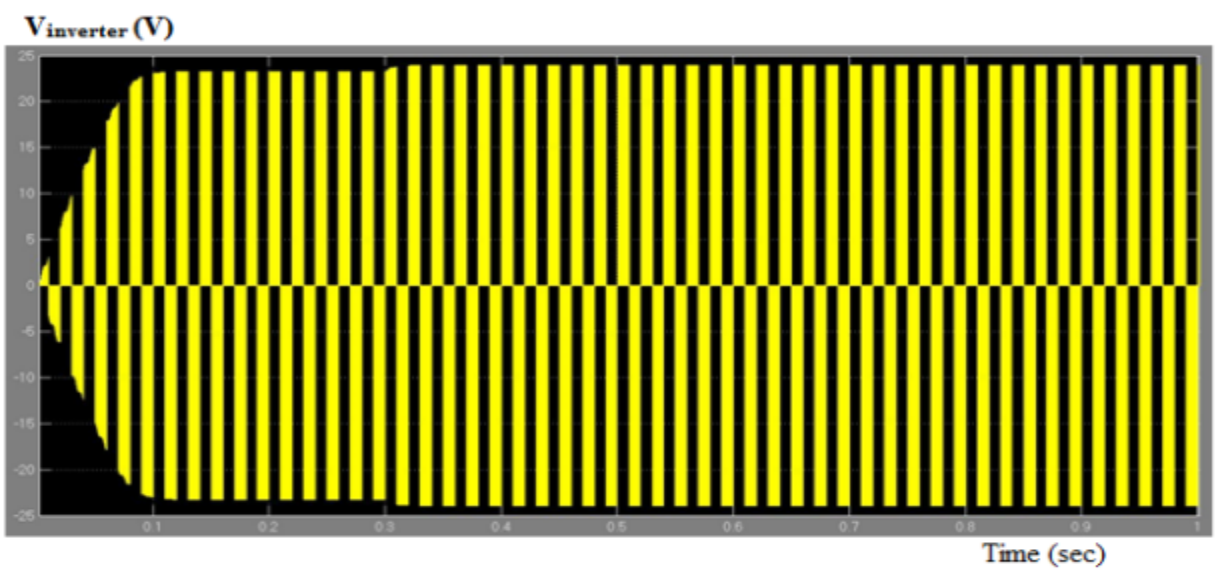

Figure 5: Inverter Output Voltage

[CE 1.11] I observed the output from the single phase transformer, its Voltage, Current, Frequency, Phase angle are necessary in order to compare with the PV-residential system so that the output of Voltage is required. From the model the 1-phase is taken through (a1-n) and simulation was run for 1 second and the output voltage is 220V and this voltage is grid utility voltage of supply mains where we are supposed to inject our Residential PV system.

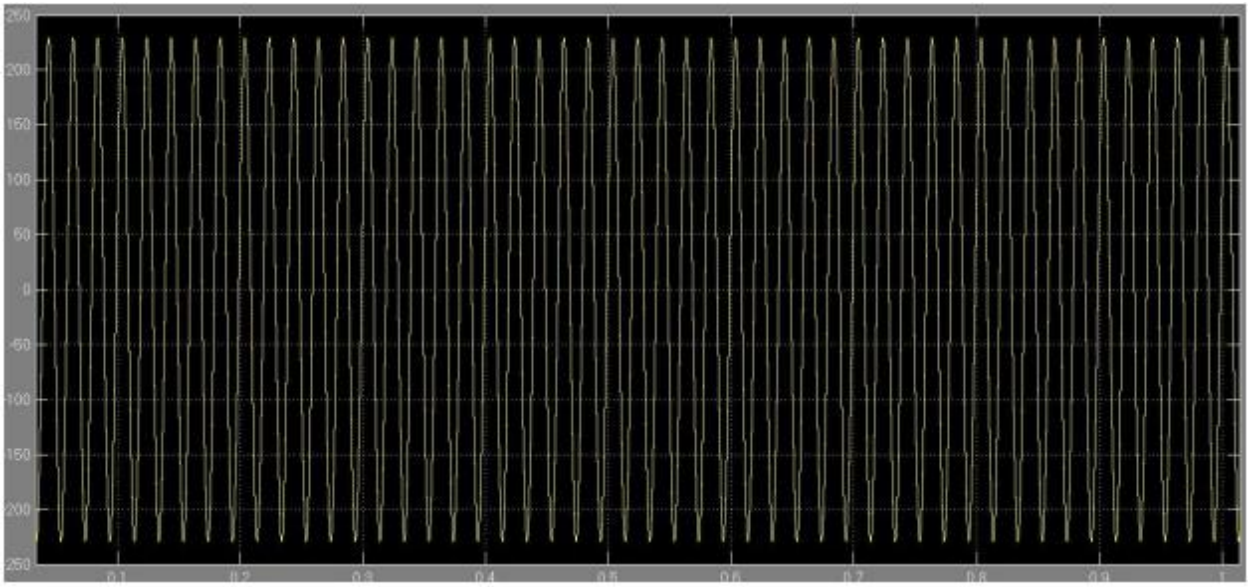

Figure 6: Voltage output of the Grid System

The output of the 1-phase Grid System simulated by MATLAB/Simulink and was run for 1 second from three phase substation source to Distribution Grid System. The output voltage and frequency are 220V and 50Hz respectively with certain phase is shown below.

The output voltage from PV-residential System shown in figure 7. Output voltage of PVresidential system and output voltage from overall grid system shown in figure 7.

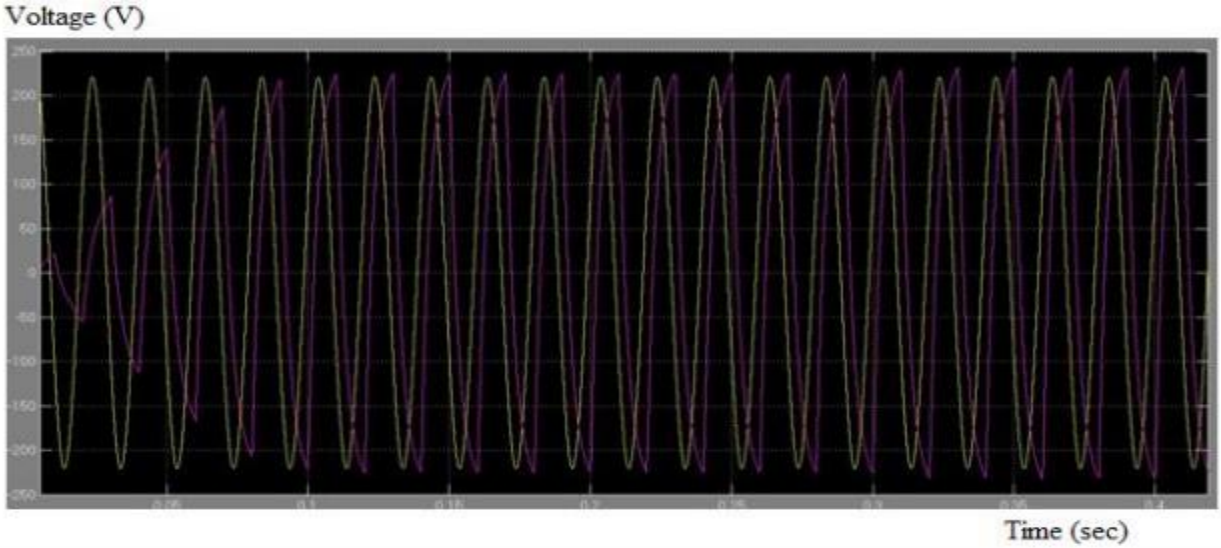

Figure 7: Both Systems output voltage comparison

C) Summary

[CE 1.12] In this project I modeled two system i.e. overall grid system from three phase sub-station source to the 1-phase and PV-residential System. The solar system was modeled using its equivalent circuit and the variation of voltage and current with the solar irradiance and temperature. It was found that the current variation with the variation of irradiance was noticeable whereas the role of temperature for the current variation was negligible and vice versa in case of the voltage. Since our project 'Grid Connected Residential solar PV system' so for the connection the synchronizing parameter such as voltage, frequency and phase sequence were required so we had focused on such parameter accordingly. The output of both the systems of voltage by simulating in MATLAB/Simulink gives voltage curve fitting curve with respect to time from where I have analyzed its result and error. I was also familiar with different operating principles and have used them in MATLAB/Simulink, related to 1-phase and 3-phase system. The installation of Grid Connected Residential PV System gave higher feasibility by optimum utilization of solar energy in mostly domestic case like remote areas where use of low load availability of national grid.