CAREER EPISODE 3

INTRODUCTION:

Time duration	
Location	
Organization	
Project	
Position	
Project Supervisor	
Project submitted to	

This career episode is about my project named **"Design and Construction of Dual Band Mobile Jammer for GSM 900 & 1800"**. This project was carried out and submitted during third year of Bachelor degree requirement in **Electronics & Communication Engineering** in **_____** from ……..to ……

CE 3.1

The project was done during the graduate course in Electronics & Communication Engineering in _____. The project was carried out individually under the **supervision and beneficial guidance** of **_____.**

BACKGROUND:

CE 3.2

My third career episode describes the project, which I did during my third year of engineering studies. During studies, I had to study GSM bands which caught my attention and I decided to design and construct a jamming system I was encouraged by my professor for this project as it was a unique project among many other options. I was able to complete this project before the end of my semester and was awarded grade A for my efforts hard work put in this project. The project was done in congregation with two other team members'. I was leading the group. I took step being a team leader and solved all the relative issues accordingly. My efficacy as team lead was even appreciated by the Project Supervisor.

CE 3.3

Jammers are basically electronic devices which are used to stop cell phones from transmitting or receiving signals from the BTS stations. Without causing any severe interference to other communication networks the jammers efficiently disable cell phones within the pre-defined regulated zones. The application mobile jammers are wide-ranging. In terror affected regions of the world these are used in public places like libraries, mosques, temples, hospitals and in educational institutes. They are also widely used by military across the globe. When jammers are activated the cell phone displays NO NETWORK. All incoming calls are automatically blocked depicting that cell phone is off. Upon switching off the jammers the cell phones automatically re-establishes communication & provide available services. The mobile jammers were basically developed to stop certain types of remotely detonated explosives by the military. The civilian applications are also very common nowadays.

The **aim** of the project was design & construction of GSM cell phone jammer. The project objectives were

- To design a dual GSM jammer
- To simulate & test our design

The **Significance** of the project was to

- Reduce the incidence of noise generated from cell phones when ringing at place where a level of silence is required
- Prevent pupils to use cell phones in university
- Prevent hazards caused by cell phone especially in Petrol Pumps and also stop cell phone use for spying purpose.

CE 3.4

This project was primarily designed by me & was completed in a group of three candidates including me and for guidance I referred to Head of Department of Electronics & Communication who was also my project Supervisor,

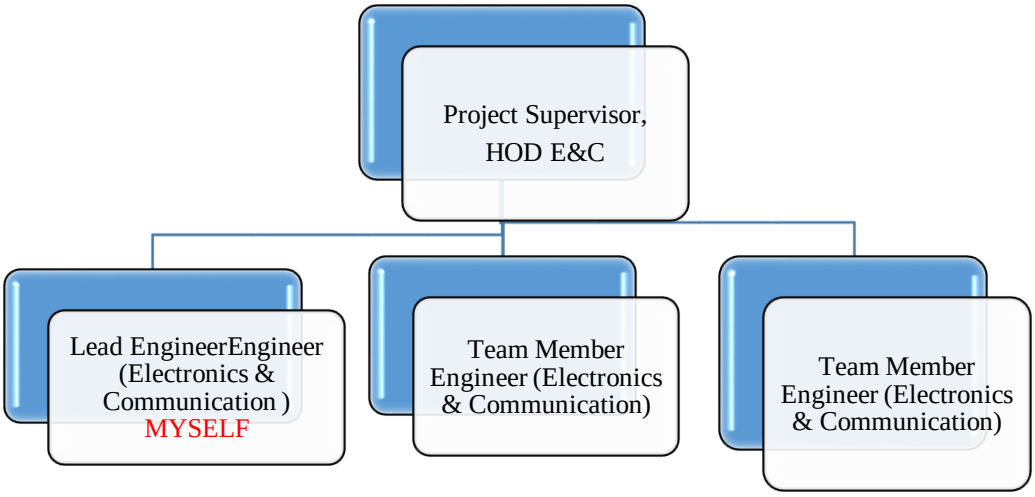

Fig: Organisational Structure

CE 3.5

The project was done in a **group, and my errands** in the course of the project were:

1. To design a flowchart of the project
2. Problem Definitions
3. Review of the work done before us
4. Modeling of the system
5. Execution of the project
6. Performance & viability testing of the project
7. Preparation of progress report for project supervisor

PERSONAL ENGINEERING ACTIVITY

CE 3.6

I was assigned as Team Lead for this Project. I did a lot of online research to find out some ideas that have been used to design & construct Mobile Jammers. In addition during the project lifecycle I had consistent meetings with the team mates & project supervisor in order to discuss about the problems & difficulties. I also had the task to prepare documents & reports with diagrams for describing the whole process. Finally, Project report was presented for review of whole project in which entire process is described.

CE 3.7

I along with my team carried our vast research on the Cell Phone Jamming segment and studied tons of material over Internet & through libraray books & journals. I went through all the latest developemnts and keeping them in view I drafted the software/hardware requirements in order to build the projects.

CE 3.8

In my quest to successfully design and construct a mobile jammer various processes were taken into consideration. These considerations are stated below.

In order to achieve my aim the first stage of my project was to study various projects done in relation to our project. Studying the different jammer projects enabled me to make some decisions on the; type of jammer to implement, frequency range and coverage distance.

- **Design Parameters**

  After studying the related work done my designed jammer was based on certain parameters which include the related frequencies, need of power & successful jamming distances.

- **Design and Simulations**

  With the designs completed the next stage was to have schematic drawings of the many parts of jamming system circuitry. After my schematic drawings were done simulations were carried out based on the schematic to ensure that the designs are working and meet our requirements. The simulations were very important stage in arriving at our goal. For simulation purpose I implied **Multisim software (version 11)**.

- **Construction of the Mobile Jammer**

  With the completion of the simulations and getting the desired results, I proceeded to construct the jammer circuits. The construction was done using various electronic devices needed to build the jammer.

- **Testing and Packaging**

  The device was tested to ascertain the characteristics of the jamming system such as; effective jamming, radiated power, etc. Packaging was important to prevent any damage to the jamming system.

CE 3.9

After tons of hardwork I designed jamming device which was TYPE-A & also commonly known as D.O.S (Denial of Service). It comprised of transmitting noise persuaded signals over the identical frequency as frequency band used. The block diagram of my system type is displayed below which shows the major components i.e. RF, IF sections along with power supply.

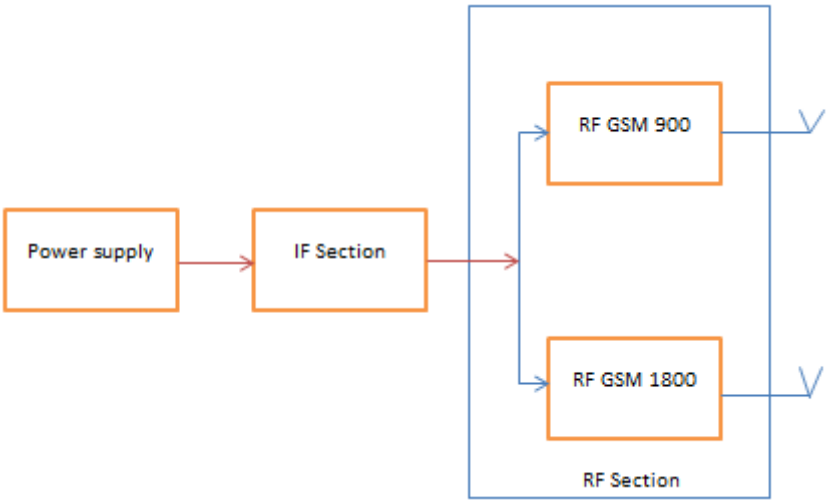

CE 3.10

It was eminent to determine the power needed to be transmitted in order to jam the mobile phone signals within a distance/radius of almost 25meters. Here I took the idyllic signal-to-noise ratio (S.N.R) and also the thoroughgoing power signal for the receiver of mobile. A very good device

has an SNR of about 9dB. My optimum goal was to determine the output power from the device. So when I added the path loss to the jamming power I got my target:

For GSM 900:

The minimum signal to noise ratio SNR = 9dB
The maximum signal power at receiver S = -15dBm
The jammer power Jr is calculated as follows: — = 9 *dB*
Then Jr = S - 9 = -15 -9 = -24dBm
Output jammer power = -24dBm + 60.04 = 36dBm s 4.0 W
For GSM 1800:
The minimum SNR = 9dB and the maximum S = -23dBm
Then, Jr = -23 - 9 = -32dBm
Output jammer power = -32dBm + 65.88 = 33.88dBm = 2.5 W

CE 3.11

An antenna is a key component for wireless communications systems. It can be defined as a device that allows the coupling of a signal, i.e. RF from a guided medium into free space (transmitting) or from free space to a guided medium (receiving).

It was difficult for our team to find an appropriate antenna. I played my part and removed this indiscrimination. With reference to the project I employed an antenna to transmit the RF signals coming from the VCO through the power amps to free space. The choice or selection of an antenna was important to achieving our desired goal. Parameters such as the reflection coefficient, Voltage Standing Wave Ratio (VSWR), gain and directivity were the factors I considered in deciding an antenna to deploy for the device.

CE 3.12

As I tested the jamming device, the results were awesome. The device successfully jammed all the mobile operators which were on GSM 900 & 1800 MHZ.

CE 3.13

I was liable for the groundwork of feasibility study which included technical & economic consideration of this project. I calculated the whole project cost scrutiny and kept the project

CE 3.14

Summary

The project played significant role in refining my skills as Electronics & Communications Engineer. In the course of this work a lot of trials were encountered like the choice & design of antenna. I did research and solved the hindrance according to my technical knowledge. I gained extensive knowledge of GSM systems & jammers during this project. Also my working as a team leader was improved and I felt ready to face challenges in the professional career.